molex

MX123 SEALED RCPT ASSY (49 CKT)
BOM & PIN OUT SHEET

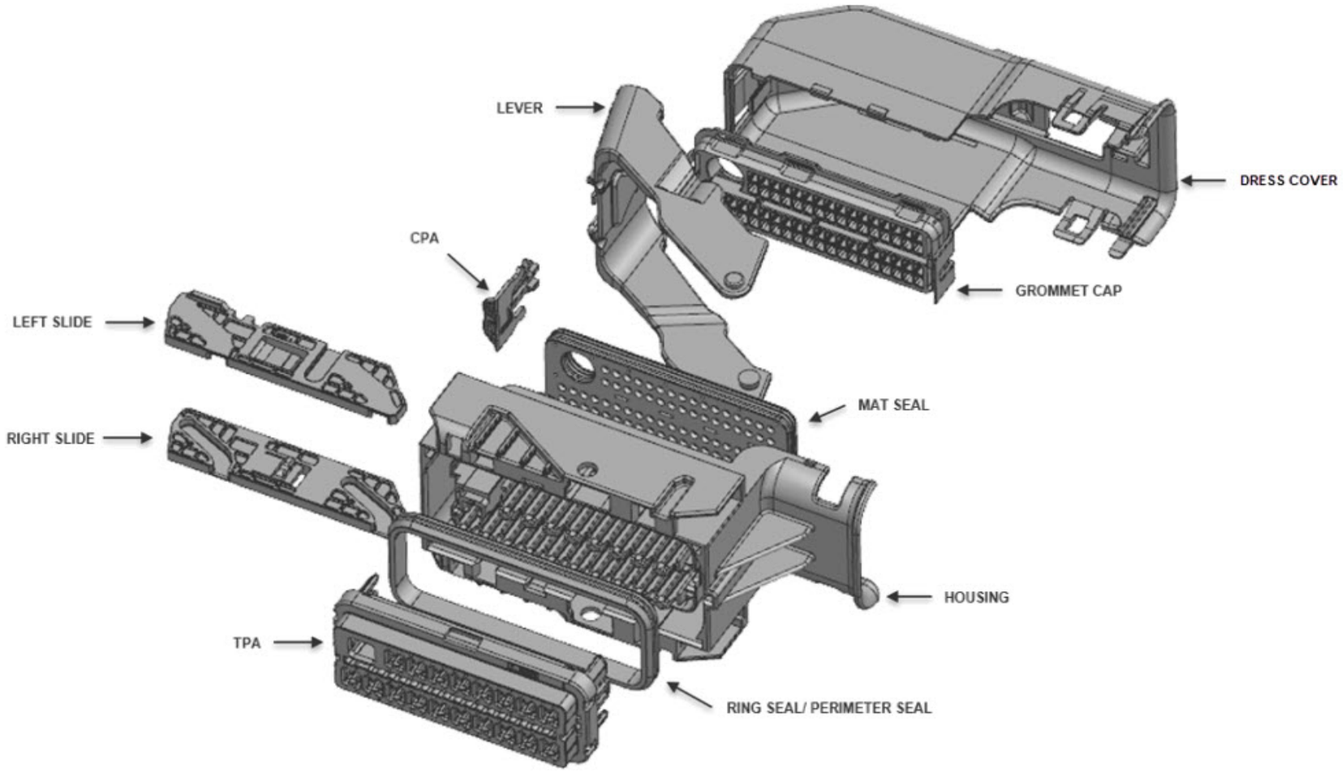

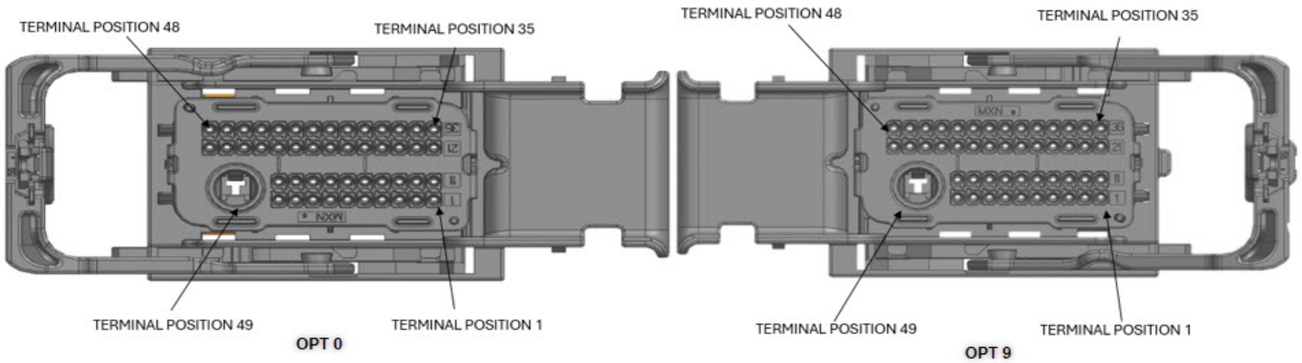

ABBREVIATION	DESCRIPTION	COLOR	MATERIAL
G-CAP-0-P	GROMMET CAP OPTION 0 PLUGGED	BLACK	GROMMET CAP OPTION 0 PLUGGED
G-CAP-0-O	GROMMET CAP OPTION 0 ALL OPEN	BLACK	GROMMET CAP OPTION 0 ALL OPEN
G-CAP-9-P	GROMMET CAP OPTION 9 PLUGGED	BLACK	GROMMET CAP OPTION 9 PLUGGED
G-CAP-9-O	GROMMET CAP OPTION 9 ALL OPEN	BLACK	GROMMET CAP OPTION 9 ALL OPEN
C-HSG-A0	CONNECTOR HOUSING KEY A - WDC OPT 0	BLACK	CONNECTOR HOUSING KEY A - WDC OPT 0
C-HSG-B0	CONNECTOR HOUSING KEY B- WDC OPT 0	BLACK	CONNECTOR HOUSING KEY B- WDC OPT 0
C-HSG-C0	CONNECTOR HOUSING KEY C- WDC OPT 0	BLACK	CONNECTOR HOUSING KEY C- WDC OPT 0
C-HSG-D0	CONNECTOR HOUSING KEY D - WDC OPT 0	BLACK	CONNECTOR HOUSING KEY D - WDC OPT 0
C-HSG-E0	CONNECTOR HOUSING KEY E - WDC OPT 0	BLACK	CONNECTOR HOUSING KEY E - WDC OPT 0
C-HSG-F0	CONNECTOR HOUSING KEY F- WDC OPT 0	BLACK	CONNECTOR HOUSING KEY F- WDC OPT 0
C-HSG-A9	CONNECTOR HOUSING KEY A- WDC OPT 9	BLACK	CONNECTOR HOUSING KEY A- WDC OPT 9
C-HSG-B9	CONNECTOR HOUSING KEY B- WDC OPT 9	BLACK	CONNECTOR HOUSING KEY B- WDC OPT 9
C-HSG-C9	CONNECTOR HOUSING KEY C- WDC OPT 9	BLACK	CONNECTOR HOUSING KEY C- WDC OPT 9
C-HSG-D9	CONNECTOR HOUSING KEY D- WDC OPT 9	BLACK	CONNECTOR HOUSING KEY D- WDC OPT 9
C-HSG-E9	CONNECTOR HOUSING KEY E- WDC OPT 9	BLACK	CONNECTOR HOUSING KEY E- WDC OPT 9
C-HSG-F9	CONNECTOR HOUSING KEY F- WDC OPT 9	BLACK	CONNECTOR HOUSING KEY F- WDC OPT 9
TPA-A0	TERMINAL POSITION ASSURANCE (TPA) OPTION 0	BLACK	TERMINAL POSITION ASSURANCE(TPA)OPTION 0
TPA-B0	TERMINAL POSITION ASSURANCE (TPA) OPTION 0	STONE GRAY	TERMINAL POSITION ASSURANCE(TPA)OPTION 0
TPA-C0	TERMINAL POSITION ASSURANCE (TPA) OPTION 0	BLUE	TERMINAL POSITION ASSURANCE(TPA)OPTION 0
TPA-D0	TERMINAL POSITION ASSURANCE (TPA) OPTION 0	BROWN	TERMINAL POSITION ASSURANCE(TPA)OPTION 0
TPA-E0	TERMINAL POSITION ASSURANCE (TPA) OPTION 0	GREEN	TERMINAL POSITION ASSURANCE(TPA)OPTION 0
TPA-F0	TERMINAL POSITION ASSURANCE (TPA) OPTION 0	NATURAL	TERMINAL POSITION ASSURANCE(TPA)OPTION 0
TPA-A9	TERMINAL POSITION ASSURANCE (TPA) OPTION 9	BLACK	TERMINAL POSITION ASSURANCE(TPA)OPTION 9
TPA-B9	TERMINAL POSITION ASSURANCE (TPA) OPTION 9	STONE GRAY	TERMINAL POSITION ASSURANCE(TPA)OPTION 9
TPA-C9	TERMINAL POSITION ASSURANCE (TPA) OPTION 9	BLUE	TERMINAL POSITION ASSURANCE(TPA)OPTION 9
TPA-D9	TERMINAL POSITION ASSURANCE (TPA) OPTION 9	BROWN	TERMINAL POSITION ASSURANCE(TPA)OPTION 9
TPA-E9	TERMINAL POSITION ASSURANCE (TPA) OPTION 9	GREEN	TERMINAL POSITION ASSURANCE(TPA)OPTION 9
TPA-F9	TERMINAL POSITION ASSURANCE (TPA) OPTION 9	NATURAL	TERMINAL POSITION ASSURANCE(TPA)OPTION 9
MAL	MATE ASSIST LEVER	BLACK	MATE ASSIST LEVER
MAL-2	MATE ASSIST LEVER-2	BLACK	MATE ASSIST LEVER
RS	SLIDE - RIGHT	BLACK	SLIDE - RIGHT
RS-2	SLIDE - RIGHT-2	BLACK	KINGFA PBT W/PTFE G.F. 30%
LS	SLIDE - LEFT	BLACK	SLIDE - LEFT
CVR BLACK	DRESS COVER BLACK	BLACK	DRESS COVER BLACK
LS-2	SLIDE - LEFT-2	BLACK	KINGFA PBT W/PTFE G.F. 30%
CPA	CONNECTOR POSITION ASSURANCE (CPA)	RED	CONNECTOR POSITION ASSURANCE (CPA)
CPA-2	CONNECTOR POSITION ASSURANCE (CPA)	RED	CONNECTOR POSITION ASSURANCE (CPA)
MSEAL	MAT SEAL	RUST RED	MAT SEAL
RSEAL	RING SEAL	RUST RED	RING SEAL

FOR ADDITIONAL INFOMRATION SEE SD-34576-001

ASSEMBLY DESCRIPTION	ASSEMBLY PART NUMBER	CONNECTOR HOUSING	GROMMET CAP	TPA	RIGHT SLIDE	LEFT SLIDE	MATE ASSIST LEVER	CPA	MAT SEAL	RING SEAL	BLOCKED TERMINALS CAVITY WITH A NUMBER INDICATES BLOCKED TERMINAL POSITION CAVITY WITHOUT A NUMBER INDICATES OPEN TERMINAL POSITION	STATUS	COMMENTS	INTEGRAL COMPONENTS SOLD SEPARATELY DRESS COVER
MX123 CONN ASSY 49 CKT BLK OPT0 KEY A/49	2167440001	C-HSG-A0	G-CAP-0-P	TPA-A0	RS-2	LS-2	MAL-2	CPA-2	MSEAL	RSEAL	- -	SALEABLE	Replacing PN 345760103	345750005
MX123 CONN ASSY 49 CKT BLU OPT0 KEY C/49	2167440003	C-HSG-C0	G-CAP-0-P	TPA-C0	RS-2	LS-2	MAL-2	CPA-2	MSEAL	RSEAL	- -	SALEABLE	Replacing PN 345760303	345750005

ER NO

DATE 02/12/2026

DOCUMENT NO. 2167440001

REVISION AB

molex

MX123 SEALED RCPT ASSY (49 CKT)
BOM & PIN OUT SHEET

ASSEMBLY DESCRIPTION	ASSEMBLY PART NUMBER	CONNECTOR HOUSING	GROMMET CAP	TPA	RIGHT SLIDE	LEFT SLIDE	MATE ASSIST LEVER	CPA	MAT SEAL	RING SEAL	BLOCKED TERMINALS CAVITY WITH A NUMBER INDICATES BLOCKED TERMINAL POSITION CAVITY WITHOUT A NUMBER INDICATES OPEN TERMINAL POSITION	STATUS	COMMENTS	INTEGRAL COMPONENTS SOLD SEPARATELY DRESS COVER
MX123 CONN ASSY 49 CKT BLK OPT9 KEY A/49	2167440007	C-HSG-A9	G-CAP-9-P	TPA-A9	RS-2	LS-2	MAL-2	CPA-2	MSEAL	RSEAL	- -	SALEABLE	Replacing PN 345761303	345750005
MX123 CONN ASSY 49 CKT BLU OPT9 KEY C/49	2167440009	C-HSG-C9	G-CAP-9-P	TPA-C9	RS-2	LS-2	MAL-2	CPA-2	MSEAL	RSEAL	- -	SALEABLE	Replacing PN 345761503	345750005
MX123 CONN ASSY 49 CKT BLK OPT0 KEY A/24	2167440013	C-HSG-A0	G-CAP-0-P	TPA-A0	RS-2	LS-2	MAL-2	CPA-2	MSEAL	RSEAL	- 47 - 45 - - 42 41 - - - 37 36 - - - - - 30 - 28 27 - - - - 22 - 20 19 18 17 16 15 14 13 12 - 10 9 - - 6 5 4 - 2 -	SALEABLE	Replacing PN 345767553	345750005
MX123 CONN ASSY 49 CKT BLU OPT0 KEY C/35	2167440014	C-HSG-C0	G-CAP-0-P	TPA-C0	RS-2	LS-2	MAL-2	CPA-2	MSEAL	RSEAL	- - - - - 43 42 - - - - - - 35 - - - 31 - 29 28 27 26 25 - - 22 - 20 19 - - - - - - - 11 - - - - - - 4 - - -	SALEABLE	Replacing PN 345767563	345750005
MX123 CONN ASSY 49 CKT BLU OPT9 KEY C/34	2167440015	C-HSG-C9	G-CAP-9-P	TPA-C9	RS-2	LS-2	MAL-2	CPA-2	MSEAL	RSEAL	- - 46 - - 43 42 - - - - - - 35 - - - 31 - 29 28 27 26 25 - - 22 - 20 19 - - - - - - - 11 - - - - - - 4 - - -	SALEABLE	Replacing PN 345767613	345750005
MX123 CONN ASSY 49 CKT BLK OPT9 KEY A/26	2167440016	C-HSG-A9	G-CAP-9-P	TPA-A9	RS-2	LS-2	MAL-2	CPA-2	MSEAL	RSEAL	- 47 - 45 - - - 41 - - - 37 36 - - - - - 30 - - 27 - - - - 22 - 20 19 18 17 16 15 14 13 12 - 10 9 - - 6 5 4 - 2 -	SALEABLE	Replacing PN 345767623	345750005
MX123 CONN ASSY 49 CKT BLK OPT0 KEY A/35	2167440017	C-HSG-A0	G-CAP-0-P	TPA-A0	RS-2	LS-2	MAL-2	CPA-2	MSEAL	RSEAL	- - - - - 43 42 - - - - - - 35 - - - 31 - 29 28 27 26 25 - - 22 - 20 19 - - - - - - - 11 - - - - - - 4 - - -	SALEABLE	Replacing PN 345767633	345750005
MX123 CONN ASSY 49 CKT BLU OPT0 KEY C/38	2167440018	C-HSG-C0	G-CAP-0-P	TPA-C0	RS-2	LS-2	MAL-2	CPA-2	MSEAL	RSEAL	- - - - 44 43 42 41 - 39 - - - 35 - 33 - - 30 - 28 27 26 - - - - 21 - - - - 15 14 13 - 11 - - 8 7 6 - 4 3 - -	SALEABLE	Replacing PN 345767653	345750005
MX123 CONN ASSY 49 CKT BLK OPT9 KEY A/28	2167440019	C-HSG-A9	G-CAP-9-P	TPA-A9	RS-2	LS-2	MAL-2	CPA-2	MSEAL	RSEAL	- - - - 44 43 42 41 - 39 - - - 35 - 33 - - 30 - 28 27 26 - - - - 21 - - - - - 15 14 13 - 11 - - 8 7 6 - 4 3 - -	SALEABLE	Replacing PN 345767663	345750005

molex

MX123 SEALED RCPT ASSY (49 CKT)
BOM & PIN OUT SHEET

ASSEMBLY DESCRIPTION	ASSEMBLY PART NUMBER	CONNECTOR HOUSING	GROMMET CAP	TPA	RIGHT SLIDE	LEFT SLIDE	MATE ASSIST LEVER	CPA	MAT SEAL	RING SEAL	BLOCKED TERMINALS CAVITY WITH A NUMBER INDICATES BLOCKED TERMINAL POSITION CAVITY WITHOUT A NUMBER INDICATES OPEN TERMINAL POSITION	STATUS	COMMENTS	INTEGRAL COMPONENTS SOLD SEPARATELY DRESS COVER
MX123 CONN ASSY 49 CKT BLU OPT0 KEY C/36	2167440020	C-HSG-C0	G-CAP-0-P	TPA-C0	RS-2	LS-2	MAL-2	CPA-2	MSEAL	RSEAL	- - - - - 43 42 - - - - - - 35 - - - 31 - 29 - - 26 25 - - 22 - - 20 19 - - 16 - - - - 11 - - - - - - - 4 - - -	SALEABLE	Replacing PN 345767673	345750005
MX123 CONN ASSY 49 CKT BLK OPT0 KEY A/28	2167440021	C-HSG-A0	G-CAP-0-P	TPA-A0	RS-2	LS-2	MAL-2	CPA-2	MSEAL	RSEAL	- 47 - 45 - - - 41 40 - - 37 36 - - 33 - - 30 - - 27 26 - - - 22 - - - 18 17 16 15 - 13 12 - - - - - - 6 5 4 - 2 -	SALEABLE	Replacing PN 345767683	345750005
MX123 CONN ASSY 49 CKT BLU OPT9 KEY C/35	2167440022	C-HSG-C9	G-CAP-9-P	TPA-C9	RS-2	LS-2	MAL-2	CPA-2	MSEAL	RSEAL	- - - - - 43 42 - - - - - - 35 - - - 31 - 29 28 27 26 25 - - 22 - - 20 19 - - - - - - - 11 - - - - - - - 4 - - -	SALEABLE	Replacing PN 345767723	345750005
MX123 CONN ASSY 49 CKT BLK OPT0 KEY A/24	2167440023	C-HSG-A0	G-CAP-0-P	TPA-A0	RS-2	LS-2	MAL-2	CPA-2	MSEAL	RSEAL	48 47 46 45 - - - - 40 - 38 37 36 - 34 - 32 31 - 29 - - - 25 24 23 22 - - 20 19 - 17 16 - - - 12 - - 10 9 - - - 5 - - 2 -	SALEABLE	Replacing PN 345767733	345750005
MX123 CONN ASSY 49 CKT BLU OPT0 KEY C/12	2167440024	C-HSG-C0	G-CAP-0-P	TPA-C0	RS-2	LS-2	MAL-2	CPA-2	MSEAL	RSEAL	48 47 46 45 44 - 42 41 40 39 38 37 36 35 34 33 32 - 30 - 28 27 - - 24 23 - 21 - - 18 17 16 15 14 13 12 - - 10 9 8 7 6 5 - 3 - 1	SALEABLE	Replacing PN 345767743	345750005
MX123 CONN ASSY 49 CKT BLK OPT9 KEY A/23	2167440025	C-HSG-A9	G-CAP-9-P	TPA-A9	RS-2	LS-2	MAL-2	CPA-2	MSEAL	RSEAL	48 47 46 45 - - - - 40 - 38 37 36 - 34 - 32 31 - 29 - - - 25 24 23 22 - - 20 19 - - 16 15 - - 12 - - 10 9 - - - 5 - - 2 1	SALEABLE	Replacing PN 345767763	345750005
MX123 CONN ASSY 49 CKT BLK OPT9 KEY A/31	2167440026	C-HSG-A9	G-CAP-9-P	TPA-A9	RS-2	LS-2	MAL-2	CPA-2	MSEAL	RSEAL	- - - - - - 42 41 - 39 - - - 35 - 33 - - 30 - - - 26 - - - - 21 - - 18 17 - - 14 13 - 11 - - 8 7 6 - 4 3 - -	SALEABLE	Replacing PN 345767773	345750005
MX123 CONN ASSY 49 CKT BLU OPT9 KEY C/35	2167440027	C-HSG-C9	G-CAP-9-P	TPA-C9	RS-2	LS-2	MAL-2	CPA-2	MSEAL	RSEAL	- - - - - 43 42 - - - - - - 35 - - - 31 - 29 28 - 26 25 - - 22 - - 20 19 - - 16 - - - - 11 - - - - - - - 4 - - -	SALEABLE	Replacing PN 345767783	345750005
MX123 CONN ASSY 49 CKT BLK OPT9 KEY A/28	2167440028	C-HSG-A9	G-CAP-9-P	TPA-A9	RS-2	LS-2	MAL-2	CPA-2	MSEAL	RSEAL	- - - - 44 43 42 41 - 39 - - - 35 - 33 - - 30 29 28 27 26 - - - - 21 - - - - - - 14 13 - 11 - - 8 7 6 - 4 3 - -	SALEABLE	Replacing PN 345767793	345750005

molex

MX123 SEALED RCPT ASSY (49 CKT)
BOM & PIN OUT SHEET

ASSEMBLY DESCRIPTION	ASSEMBLY PART NUMBER	CONNECTOR HOUSING	GROMMET CAP	TPA	RIGHT SLIDE	LEFT SLIDE	MATE ASSIST LEVER	CPA	MAT SEAL	RING SEAL	BLOCKED TERMINALS CAVITY WITH A NUMBER INDICATES BLOCKED TERMINAL POSITION CAVITY WITHOUT A NUMBER INDICATES OPEN TERMINAL POSITION	STATUS	COMMENTS	INTEGRAL COMPONENTS SOLD SEPARATELY DRESS COVER
MX123 CONN ASSY 49 CKT BLU OPT9 KEY C/34	2167440029	C-HSG-C9	G-CAP-9-P	TPA-C9	RS-2	LS-2	MAL-2	CPA-2	MSEAL	RSEAL	- - - - - 43 42 - - - - - - 35 - - - 31 - 29 28 - 26 25 - - 22 - - 20 19 - - 16 - - - - 11 - - - - - 6 - 4 - - -	SALEABLE	Replacing PN 345767813	345750005
MX123 CONN ASSY 49 CKT BLK OPT0 KEY A/26	2167440030	C-HSG-A0	G-CAP-0-P	TPA-A0	RS-2	LS-2	MAL-2	CPA-2	MSEAL	RSEAL	- - - - 44 43 42 41 - 39 - - - 35 - 33 - - 30 - 28 27 26 - - - - 21 - - - 18 - - 15 14 13 - 11 - - - 8 7 6 - 4 3 - 1	SALEABLE	Replacing PN 345767823	345750005
MX123 CONN ASSY 49 CKT BLU OPT0 KEY C/31	2167440031	C-HSG-C0	G-CAP-0-P	TPA-C0	RS-2	LS-2	MAL-2	CPA-2	MSEAL	RSEAL	- - 46 - - 43 42 - - - - - - - - 33 - 31 - 29 - 27 26 25 - 23 22 - - 20 19 - - 16 - - - - - - 10 - 8 - - - 4 - 2 -	SALEABLE	Replacing PN 345767833	345750005
MX123 CONN ASSY 49 CKT BLK OPT9 KEY A/33	2167440032	C-HSG-A9	G-CAP-9-P	TPA-A9	RS-2	LS-2	MAL-2	CPA-2	MSEAL	RSEAL	- - - - - - 42 41 - 39 - - - 35 - 33 - - 30 29 - - 26 - - - - 21 - - - - - - 14 13 - 11 - - 8 7 - - 4 3 - -	SALEABLE	Replacing PN 345767843	345750005
MX123 CONN ASSY 49 CKT BLU OPT0 KEY C/40	2167440033	C-HSG-C0	G-CAP-0-P	TPA-C0	RS-2	LS-2	MAL-2	CPA-2	MSEAL	RSEAL	- - - - - 43 - - - - - - - - - - - 31 - - - - 26 25 - - 22 - - 19 - - - - - - - 11 - - - - - - 4 - 2 -	SALEABLE	Replacing PN 345767853	345750005
MX123 CONN ASSY 49 CKT BLK OPT9 KEY A/25	2167440034	C-HSG-A9	G-CAP-9-P	TPA-A9	RS-2	LS-2	MAL-2	CPA-2	MSEAL	RSEAL	- 47 - 45 44 - 42 41 40 - - 37 - - - - 32 - 30 - 28 - 26 - - - 22 - - - 18 17 16 15 14 13 12 - - - 8 - - 5 4 3 2 -	SALEABLE	Replacing PN 345767863	345750005
MX123 CONN ASSY 49 CKT BLU OPT9 KEY C/34	2167440035	C-HSG-C9	G-CAP-9-P	TPA-C9	RS-2	LS-2	MAL-2	CPA-2	MSEAL	RSEAL	- - - - - - 42 - - - - - - 35 - - - 31 - 29 28 - 26 25 - - 22 - - 20 19 - - 16 - - - - 11 - 10 - - - - - 4 - 2 -	SALEABLE	Replacing PN 345767873	345750005
MX123 CONN ASSY 49 CKT BLK OPT9 KEY A/30	2167440036	C-HSG-A9	G-CAP-9-P	TPA-A9	RS-2	LS-2	MAL-2	CPA-2	MSEAL	RSEAL	- - - - - - 42 41 - 39 38 - - 35 - 33 - - 30 - 28 - 26 - - - - 21 - - - 17 - 15 14 13 - 11 - - 8 7 - - 4 3 - -	SALEABLE	Replacing PN 345767883	345750005
MX123 CONN ASSY 49 CKT BLK OPT9 KEY A/25	2167440037	C-HSG-A9	G-CAP-9-P	TPA-A9	RS-2	LS-2	MAL-2	CPA-2	MSEAL	RSEAL	- - - - 44 43 42 41 - 39 - - - 35 - 33 - - 30 - 28 27 26 - - - - 21 - - 18 - - 15 14 13 12 11 - - 8 7 6 - 4 3 - 1	SALEABLE	Replacing PN 345767893	345750005

molex

MX123 SEALED RCPT ASSY (49 CKT)
BOM & PIN OUT SHEET

ASSEMBLY DESCRIPTION	ASSEMBLY PART NUMBER	CONNECTOR HOUSING	GROMMET CAP	TPA	RIGHT SLIDE	LEFT SLIDE	MATE ASSIST LEVER	CPA	MAT SEAL	RING SEAL	BLOCKED TERMINALS CAVITY WITH A NUMBER INDICATES BLOCKED TERMINAL POSITION CAVITY WITHOUT A NUMBER INDICATES OPEN TERMINAL POSITION	STATUS	COMMENTS	INTEGRAL COMPONENTS SOLD SEPARATELY DRESS COVER
MX123 CONN ASSY 49 CKT BLK OPT0 KEY A/27	2167440038	C-HSG-A0	G-CAP-0-P	TPA-A0	RS-2	LS-2	MAL-2	CPA-2	MSEAL	RSEAL	- - - - 44 43 42 41 - 39 - - - 35 - 33 - - 30 - 28 27 26 - - - - 21 - - - 18 - - 15 14 13 - 11 - - - 8 7 6 - 4 3 - -	SALEABLE	Replacing PN 345767903	345750005
MX123 CONN ASSY 49 CKT BLK OPT9 KEY A/27	2167440039	C-HSG-A9	G-CAP-9-P	TPA-A9	RS-2	LS-2	MAL-2	CPA-2	MSEAL	RSEAL	- 47 - 45 44 - 42 41 40 - - 37 - - - - - - 30 - 28 - 26 - - - - - - - 18 17 16 15 14 13 12 - - - 8 - - 5 4 3 2 -	SALEABLE	Replacing PN 345767913	345750005
MX123 CONN ASSY 49 CKT BLK OPT0 KEY A/34	2167440040	C-HSG-A0	G-CAP-0-P	TPA-A0	RS-2	LS-2	MAL-2	CPA-2	MSEAL	RSEAL	- - - - - - 42 41 - 39 - - - 35 - 33 - - 30 - - - 26 - - - - 21 - - - - - - 14 13 - 11 - - 8 7 - - 4 3 - -	SALEABLE	Replacing PN 345767923	345750005
MX123 CONN ASSY 49 CKT BLU OPT0 KEY C/14	2167440041	C-HSG-C0	G-CAP-0-P	TPA-C0	RS-2	LS-2	MAL-2	CPA-2	MSEAL	RSEAL	48 47 46 45 44 43 42 41 40 39 38 37 36 35 34 33 32 31 30 29 28 27 26 25 24 23 22 21 - 19 - - - 15 - - - 11 10 - - - - 5 4 - 2 -	SALEABLE	Replacing PN 345767933	345750005
MX123 CONN ASSY 49 CKT BLK OPT0 KEY A/27	2167440042	C-HSG-A0	G-CAP-0-P	TPA-A0	RS-2	LS-2	MAL-2	CPA-2	MSEAL	RSEAL	- - - - 44 43 42 41 - 39 - - - 35 - 33 - - 30 - 28 27 26 - - - - 21 - - 18 17 - - 14 13 - 11 - - 8 7 6 - 4 3 - -	SALEABLE	Replacing PN 345767943	345750005
MX123 CONN ASSY 49 CKT BLK OPT9 KEY A/26	2167440043	C-HSG-A9	G-CAP-9-P	TPA-A9	RS-2	LS-2	MAL-2	CPA-2	MSEAL	RSEAL	- 47 - 45 44 - 42 41 40 - - 37 - - - - - - 30 - 28 - 26 - - - 22 - - - 18 17 16 15 14 13 12 - - - 8 - - 5 4 3 2 -	SALEABLE	Replacing PN 345767963	345750005
MX123 CONN ASSY 49 CKT BLK OPT0 KEY A/30	2167440044	C-HSG-A0	G-CAP-0-P	TPA-A0	RS-2	LS-2	MAL-2	CPA-2	MSEAL	RSEAL	- - - - - - 42 41 - 39 - - - 35 - 33 - - 30 29 - - 26 - - - - 21 - - 18 17 - - 14 13 - 11 - - 8 7 6 - 4 3 - -	SALEABLE	Replacing PN 345767973	345750005
MX123 CONN ASSY 49 CKT BLK OPT9 KEY A/18	2167440045	C-HSG-A9	G-CAP-9-P	TPA-A9	RS-2	LS-2	MAL-2	CPA-2	MSEAL	RSEAL	48 47 46 45 44 43 42 41 40 39 - 37 36 35 34 - - 31 30 - - 27 - - 24 - 22 21 - 19 - 17 - - 14 13 12 11 - 9 - - - - 4 3 2 1	SALEABLE	Replacing PN 345767983	345750005
MX123 CONN ASSY 49 CKT BLK OPT0 KEY A/31	2167440047	C-HSG-A0	G-CAP-0-P	TPA-A0	RS-2	LS-2	MAL-2	CPA-2	MSEAL	RSEAL	- - - - - - 42 41 - 39 - - - 35 - 33 - - 30 - - - 26 - - - - 21 - - 18 17 - 15 14 13 - 11 - - 8 7 - - 4 3 - -	SALEABLE	Replacing PN 345768003	345750005

molex

MX123 SEALED RCPT ASSY (49 CKT)
BOM & PIN OUT SHEET

ASSEMBLY DESCRIPTION	ASSEMBLY PART NUMBER	CONNECTOR HOUSING	GROMMET CAP	TPA	RIGHT SLIDE	LEFT SLIDE	MATE ASSIST LEVER	CPA	MAT SEAL	RING SEAL	BLOCKED TERMINALS CAVITY WITH A NUMBER INDICATES BLOCKED TERMINAL POSITION CAVITY WITHOUT A NUMBER INDICATES OPEN TERMINAL POSITION	STATUS	COMMENTS	INTEGRAL COMPONENTS SOLD SEPARATELY DRESS COVER
MX123 CONN ASSY 49 CKT BLK OPT9 KEY A/26	2167440048	C-HSG-A9	G-CAP-9-P	TPA-A9	RS-2	LS-2	MAL-2	CPA-2	MSEAL	RSEAL	- - - - 44 43 42 41 - 39 38 - - 35 - 33 - - 30 - 28 27 26 - - - - 21 - - - - 17 - 15 14 13 - 11 - - 8 7 6 - 4 3 - -	SALEABLE	Replacing PN 345768023	345750005
MX123 CONN ASSY 49 CKT BLK OPT9 KEY A/21	2167440049	C-HSG-A9	G-CAP-9-P	TPA-A9	RS-2	LS-2	MAL-2	CPA-2	MSEAL	RSEAL	48 47 46 45 44 43 42 41 40 39 - 37 36 35 34 - - 31 30 - - 27 - - 24 - 22 21 - 19 - - - - 14 13 12 11 - 9 - - - - - 3 - 1	SALEABLE	Replacing PN 345768033	345750005
MX123 CONN ASSY 49 CKT BLU OPT9 KEY C/28	2167440050	C-HSG-C9	G-CAP-9-P	TPA-C9	RS-2	LS-2	MAL-2	CPA-2	MSEAL	RSEAL	48 - 46 - - 43 42 41 - - - - - 35 - 33 - 31 - 29 - 27 26 25 - - 22 - 20 19 - - 16 - - - - - 10 - 8 - 6 - 4 - 2 -	SALEABLE	Replacing PN 345768043	345750005
MX123 CONN ASSY 49 CKT BLK OPT0 KEY A/30	2167440051	C-HSG-A0	G-CAP-0-P	TPA-A0	RS-2	LS-2	MAL-2	CPA-2	MSEAL	RSEAL	- - - - - - 42 41 - 39 - - - 35 - 33 - - 30 - - - 26 - - - - 21 - - 18 17 - 15 14 13 - 11 - - 8 7 6 - 4 3 - -	SALEABLE	Replacing PN 345768053	345750005
MX123 CONN ASSY 49 CKT BLK OPT9 KEY A/32	2167440052	C-HSG-A9	G-CAP-9-P	TPA-A9	RS-2	LS-2	MAL-2	CPA-2	MSEAL	RSEAL	- - - - - - 42 41 - 39 38 - - 35 - 33 - - 30 - - - 26 - - - - 21 - - - 17 - - 14 13 - 11 - - 8 7 6 - 4 - - -	SALEABLE	Replacing PN 345768063	345750005
MX123 CONN ASSY 49 CKT BLU OPT0 KEY C/34	2167440053	C-HSG-C0	G-CAP-0-P	TPA-C0	RS-2	LS-2	MAL-2	CPA-2	MSEAL	RSEAL	- - - - - 43 42 - - - - - - 35 - - - 31 - 29 - 27 26 25 - - - - - 19 - - - 15 - - - 11 10 - - - - 5 4 - 2 -	SALEABLE	Replacing PN 345768073	345750005
MX123 CONN ASSY 49 CKT BLK OPT0 KEY A/33	2167440054	C-HSG-A0	G-CAP-0-P	TPA-A0	RS-2	LS-2	MAL-2	CPA-2	MSEAL	RSEAL	- - - - - - 42 41 - 39 - - - 35 - 33 - - 30 - - - 26 - - - - 21 - - - - - - 14 13 - 11 - - 8 7 6 - 4 3 - -	SALEABLE	Replacing PN 345768113	345750005
MX123 CONN ASSY 49 CKT BLK OPT0 KEY A/31	2167440055	C-HSG-A0	G-CAP-0-P	TPA-A0	RS-2	LS-2	MAL-2	CPA-2	MSEAL	RSEAL	- - - - - - 42 41 - 39 - - - 35 - 33 - - 30 29 - - 26 - - - - 21 - - 18 - - - 14 13 - 11 - - 8 7 6 - 4 3 - -	SALEABLE	Replacing PN 345768123	345750005
MX123 CONN ASSY 49 CKT BLK OPT0 KEY A/27	2167440056	C-HSG-A0	G-CAP-0-P	TPA-A0	RS-2	LS-2	MAL-2	CPA-2	MSEAL	RSEAL	- 47 - 45 - - - 41 - - - 37 36 - - - - - 30 - - 27 - - - - 22 - 20 19 18 17 16 15 - 13 12 - 10 9 - - 6 5 4 - 2 -	SALEABLE	Replacing PN 345768133	345750005

molex

MX123 SEALED RCPT ASSY (49 CKT)
BOM & PIN OUT SHEET

ASSEMBLY DESCRIPTION	ASSEMBLY PART NUMBER	CONNECTOR HOUSING	GROMMET CAP	TPA	RIGHT SLIDE	LEFT SLIDE	MATE ASSIST LEVER	CPA	MAT SEAL	RING SEAL	BLOCKED TERMINALS CAVITY WITH A NUMBER INDICATES BLOCKED TERMINAL POSITION CAVITY WITHOUT A NUMBER INDICATES OPEN TERMINAL POSITION	STATUS	COMMENTS	INTEGRAL COMPONENTS SOLD SEPARATELY DRESS COVER
MX123 CONN ASSY 49 CKT BLK OPT0 KEY A/1	2167440057	C-HSG-A0	G-CAP-0-P	TPA-A0	RS-2	LS-2	MAL-2	CPA-2	MSEAL	RSEAL	48 47 46 45 44 43 42 41 40 39 38 37 36 35 34 33 32 31 30 29 28 27 26 25 24 23 22 21 - 20 19 18 17 16 15 14 13 12 11 10 9 8 7 6 5 4 3 2 1	SALEABLE	Replacing PN 345769113	345750005
MX123 CONN ASSY 49 CKT BLU OPT0 KEY C/1	2167440058	C-HSG-C0	G-CAP-0-P	TPA-C0	RS-2	LS-2	MAL-2	CPA-2	MSEAL	RSEAL	48 47 46 45 44 43 42 41 40 39 38 37 36 35 34 33 32 31 30 29 28 27 26 25 24 23 22 21 - 20 19 18 17 16 15 14 13 12 11 10 9 8 7 6 5 4 3 2 1	SALEABLE	Replacing PN 345769123	345750005
MX123 CONN ASSY 49 CKT BLK OPT9 KEY A/32	2167440059	C-HSG-A9	G-CAP-9-P	TPA-A9	RS-2	LS-2	MAL-2	CPA-2	MSEAL	RSEAL	- - - - - - 42 41 - 39 - - - 35 - 33 - - 30 - - - 26 - - - - 21 - - - - - 15 14 13 - 11 - - 8 7 6 - 4 3 - -	SALEABLE	Replacing PN 345769133	345750005
MX123 CONN ASSY 49 CKT BLU OPT9 KEY C/30	2167440060	C-HSG-C9	G-CAP-9-P	TPA-C9	RS-2	LS-2	MAL-2	CPA-2	MSEAL	RSEAL	48 - 46 - - 43 42 41 - - - - - 35 - 33 - 31 - 29 28 27 - - - - 22 - - 20 19 - - 16 - - - - 11 - - 8 - - - 4 - 2 -	SALEABLE	Replacing PN 345769143	345750005
MX123 CONN ASSY 49 CKT BLK OPT9 KEY A/18	2167440061	C-HSG-A9	G-CAP-9-P	TPA-A9	RS-2	LS-2	MAL-2	CPA-2	MSEAL	RSEAL	48 47 46 45 - - 42 - 40 39 38 - - 35 - - - 31 30 29 28 27 26 25 24 23 - 21 - 20 19 - - - - 14 13 12 11 10 9 - - - - 4 3 2 1	SALEABLE	Replacing PN 345769153	345750005
MX123 CONN ASSY 49 CKT BLK OPT0 KEY A/28	2167440062	C-HSG-A0	G-CAP-0-P	TPA-A0	RS-2	LS-2	MAL-2	CPA-2	MSEAL	RSEAL	- - - - 44 43 42 41 - 39 - - - 35 - 33 - - 30 - 28 27 26 - - - - 21 - - 18 - - - 14 13 - 11 - - 8 7 6 - 4 3 - -	SALEABLE	Replacing PN 345769163	345750005
MX123 CONN ASSY 49 CKT BLK OPT9 KEY A/38	2167440063	C-HSG-A9	G-CAP-9-P	TPA-A9	RS-2	LS-2	MAL-2	CPA-2	MSEAL	RSEAL	- - - - 44 - 42 41 - - - - - - - - - - 30 - 28 - 26 - - - - - - - - - - - 14 13 - - - - 8 - - - 4 3 - -	SALEABLE	Replacing PN 345769173	345750005
MX123 CONN ASSY 49 CKT BLU OPT0 KEY C/34	2167440064	C-HSG-C0	G-CAP-0-P	TPA-C0	RS-2	LS-2	MAL-2	CPA-2	MSEAL	RSEAL	- - - - - 43 42 - - - - - - 35 - - - 31 - 29 - - 26 25 - - - - 20 19 - - - 15 - - - 11 10 - - - - 5 4 - 2 -	SALEABLE	Replacing PN 345769193	345750005
MX123 CONN ASSY 49 CKT BLK OPT9 KEY A/20	2167440065	C-HSG-A9	G-CAP-9-P	TPA-A9	RS-2	LS-2	MAL-2	CPA-2	MSEAL	RSEAL	48 47 46 45 44 43 42 41 40 39 - 37 36 35 34 - - 31 30 - - 27 - - 24 - 22 21 - 19 - - - - 14 13 12 11 - 9 - - - - - 3 2 1	SALEABLE	Replacing PN 345769203	345750005

molex

MX123 SEALED RCPT ASSY (49 CKT)
BOM & PIN OUT SHEET

ASSEMBLY DESCRIPTION	ASSEMBLY PART NUMBER	CONNECTOR HOUSING	GROMMET CAP	TPA	RIGHT SLIDE	LEFT SLIDE	MATE ASSIST LEVER	CPA	MAT SEAL	RING SEAL	BLOCKED TERMINALS CAVITY WITH A NUMBER INDICATES BLOCKED TERMINAL POSITION CAVITY WITHOUT A NUMBER INDICATES OPEN TERMINAL POSITION	STATUS	COMMENTS	INTEGRAL COMPONENTS SOLD SEPARATELY DRESS COVER
MX123 CONN ASSY 49 CKT BLK OPT9 KEY A/14	2167440066	C-HSG-A9	G-CAP-9-P	TPA-A9	RS-2	LS-2	MAL-2	CPA-2	MSEAL	RSEAL	48 47 46 45 44 43 42 41 40 39 38 - 36 35 - - - 31 30 29 28 27 26 25 24 - 22 21 - 20 19 - - - - 14 13 12 11 - 10 9 - - - - 4 3 2 1	SALEABLE	Replacing PN 345769213	345750005
MX123 CONN ASSY 49 CKT BLU OPT0 KEY C/29	2167440067	C-HSG-C0	G-CAP-0-P	TPA-C0	RS-2	LS-2	MAL-2	CPA-2	MSEAL	RSEAL	48 - 46 - - 43 42 41 - - - - - 35 - 33 - 31 - 29 - - 26 25 - 23 22 - - 20 19 - - 16 - - - - - - 10 - 8 - 6 - - - 2 -	SALEABLE	Replacing PN 345769223	345750005
MX123 CONN ASSY 49 CKT BLK OPT9 KEY A/22	2167440068	C-HSG-A9	G-CAP-9-P	TPA-A9	RS-2	LS-2	MAL-2	CPA-2	MSEAL	RSEAL	- - - - 44 43 42 41 - 39 38 - - 35 - 33 - - 30 29 28 27 26 25 24 - - 21 - - - 18 17 - 15 14 13 - 11 - 9 - 7 6 - 4 3 - -	SALEABLE	Replacing PN 345769233	345750005
MX123 CONN ASSY 49 CKT BLK OPT9 KEY A/25	2167440069	C-HSG-A9	G-CAP-9-P	TPA-A9	RS-2	LS-2	MAL-2	CPA-2	MSEAL	RSEAL	- - - - 44 43 42 41 - 39 38 - - 35 - - - - 30 29 28 27 26 - - - - 21 - - - 18 17 - 15 14 13 - 11 - - 8 7 6 - 4 3 - -	SALEABLE	Replacing PN 345769243	345750005
MX123 CONN ASSY 49 CKT BLK OPT9 KEY A/24	2167440070	C-HSG-A9	G-CAP-9-P	TPA-A9	RS-2	LS-2	MAL-2	CPA-2	MSEAL	RSEAL	- - - - 44 43 42 41 - 39 38 - - 35 - 33 - - 30 29 28 27 26 - - - - 21 - - - 18 17 - 15 14 13 - 11 - - 8 7 6 - 4 3 - -	SALEABLE	Replacing PN 345769253	345750005
MX123 CONN ASSY 49 CKT BLK OPT9 KEY A/26	2167440071	C-HSG-A9	G-CAP-9-P	TPA-A9	RS-2	LS-2	MAL-2	CPA-2	MSEAL	RSEAL	- - - - 44 43 42 41 - 39 38 - - 35 - 33 - - 30 - 28 27 26 - - - - 21 - - 18 17 - - 14 13 - 11 - - 8 7 6 - 4 3 - -	SALEABLE	Replacing PN 345769263	345750005
MX123 CONN ASSY 49 CKT BLK OPT9 KEY A/18	2167440072	C-HSG-A9	G-CAP-9-P	TPA-A9	RS-2	LS-2	MAL-2	CPA-2	MSEAL	RSEAL	48 47 46 45 44 43 42 41 40 39 - 37 36 - 34 - - 31 30 29 28 27 26 25 24 - 22 - - 20 19 - - - - 14 13 12 - - 10 9 - - - - - 3 2 -	SALEABLE	Replacing PN 345769273	345750005
MX123 CONN ASSY 49 CKT BLK OPT0 KEY A/29	2167440073	C-HSG-A0	G-CAP-0-P	TPA-A0	RS-2	LS-2	MAL-2	CPA-2	MSEAL	RSEAL	- - - - - - 42 41 - 39 - - - 35 - 33 - - 30 - 28 27 26 - - - - 21 - - 18 17 - - 14 13 - 11 - - 8 7 6 - 4 3 - -	SALEABLE	Replacing PN 345769283	345750005
MX123 CONN ASSY 49 CKT BLU OPT9 KEY C/34	2167440074	C-HSG-C9	G-CAP-9-P	TPA-C9	RS-2	LS-2	MAL-2	CPA-2	MSEAL	RSEAL	- - - - - - 42 - - - - - - - - - - 31 - 29 28 27 26 25 - - 22 - - 20 19 - - - 15 - - - 11 - - - - - 5 4 - 2 -	SALEABLE	Replacing PN 345769293	345750005

molex

MX123 SEALED RCPT ASSY (49 CKT)
BOM & PIN OUT SHEET

ASSEMBLY DESCRIPTION	ASSEMBLY PART NUMBER	CONNECTOR HOUSING	GROMMET CAP	TPA	RIGHT SLIDE	LEFT SLIDE	MATE ASSIST LEVER	CPA	MAT SEAL	RING SEAL	BLOCKED TERMINALS CAVITY WITH A NUMBER INDICATES BLOCKED TERMINAL POSITION CAVITY WITHOUT A NUMBER INDICATES OPEN TERMINAL POSITION	STATUS	COMMENTS	INTEGRAL COMPONENTS SOLD SEPARATELY DRESS COVER
MX123 CONN ASSY 49 CKT BLK OPT9 KEY A/23	2167440075	C-HSG-A9	G-CAP-9-P	TPA-A9	RS-2	LS-2	MAL-2	CPA-2	MSEAL	RSEAL	- 47 - 45 44 - - 41 - - - 37 36 - - 33 - - 30 - - - - - - - 22 - - 20 19 18 17 16 15 14 13 12 - - 10 9 8 7 - 5 4 3 2 -	SALEABLE	Replacing PN 345769303	345750005
MX123 CONN ASSY 49 CKT BLU OPT9 KEY C/31	2167440076	C-HSG-C9	G-CAP-9-P	TPA-C9	RS-2	LS-2	MAL-2	CPA-2	MSEAL	RSEAL	48 - 46 - - 43 42 41 - - - - - 35 - 33 - 31 - 29 - - 26 25 - - 22 - - 20 19 - - 16 - - - - - - 10 - 8 - - - - - 2 -	SALEABLE	Replacing PN 345769313	345750005
MX123 CONN ASSY 49 CKT BLK OPT0 KEY A/46	2167440077	C-HSG-A0	G-CAP-0-P	TPA-A0	RS-2	LS-2	MAL-2	CPA-2	MSEAL	RSEAL	- 6 - 4 3 - -	SALEABLE	Replacing PN 345769323	345750005
MX123 CONN ASSY 49 CKT BLK OPT9 KEY A/30	2167440078	C-HSG-A9	G-CAP-9-P	TPA-A9	RS-2	LS-2	MAL-2	CPA-2	MSEAL	RSEAL	- - - - - - 42 41 - - 38 - - 35 - 33 - - 30 - - - 26 - - - - 21 - - 18 17 - 15 14 13 - 11 - - 8 7 6 - 4 3 - -	SALEABLE	Replacing PN 345769363	345750005
MX123 CONN ASSY 49 CKT BLK OPT0 KEY A/26	2167440079	C-HSG-A0	G-CAP-0-P	TPA-A0	RS-2	LS-2	MAL-2	CPA-2	MSEAL	RSEAL	- - - - 44 43 42 41 - 39 38 - - 35 - - - - 30 29 28 27 26 - - - - 21 - - 18 17 - - 14 13 - 11 - - 8 7 6 - 4 3 - -	SALEABLE	Replacing PN 345769373	345750005
MX123 CONN ASSY 49 CKT BLU OPT0 KEY C/32	2167440080	C-HSG-C0	G-CAP-0-P	TPA-C0	RS-2	LS-2	MAL-2	CPA-2	MSEAL	RSEAL	- - 46 - - 43 42 - - - - - - 35 - 33 - 31 - 29 - - 26 25 - - 22 - - 20 19 - - 16 - - - - - - 10 - 8 - - - 4 - 2 -	SALEABLE	Replacing PN 345769383	345750005
MX123 CONN ASSY 49 CKT BLK OPT9 KEY A/26	2167440081	C-HSG-A9	G-CAP-9-P	TPA-A9	RS-2	LS-2	MAL-2	CPA-2	MSEAL	RSEAL	- 47 - 45 44 - 42 41 40 - - 37 - - - 33 - - 30 - 28 - 26 - - - 22 - - - 18 17 - 15 14 13 12 - - - 8 - - 5 4 3 2 -	SALEABLE	Replacing PN 345769393	345750005
MX123 CONN ASSY 49 CKT BLK OPT9 KEY A/31	2167440082	C-HSG-A9	G-CAP-9-P	TPA-A9	RS-2	LS-2	MAL-2	CPA-2	MSEAL	RSEAL	- - - - - - 42 41 - 39 - - - 35 - 33 - - 30 - 28 27 26 - - - - 21 - - - - - - 14 13 - 11 - - 8 7 6 - 4 3 - -	SALEABLE	Replacing PN 345769403	345750005
MX123 CONN ASSY 49 CKT BLK OPT9 KEY A/32	2167440083	C-HSG-A9	G-CAP-9-P	TPA-A9	RS-2	LS-2	MAL-2	CPA-2	MSEAL	RSEAL	- - - - - - 42 41 - - - - - 35 - 33 - - 30 - - - 26 - - - - 21 - - 18 17 - - 14 13 - 11 - - 8 7 6 - 4 3 - -	SALEABLE		345750005

molex

MX123 SEALED RCPT ASSY (49 CKT)
BOM & PIN OUT SHEET

ASSEMBLY DESCRIPTION	ASSEMBLY PART NUMBER	CONNECTOR HOUSING	GROMMET CAP	TPA	RIGHT SLIDE	LEFT SLIDE	MATE ASSIST LEVER	CPA	MAT SEAL	RING SEAL	BLOCKED TERMINALS CAVITY WITH A NUMBER INDICATES BLOCKED TERMINAL POSITION CAVITY WITHOUT A NUMBER INDICATES OPEN TERMINAL POSITION	STATUS	COMMENTS	INTEGRAL COMPONENTS SOLD SEPARATELY DRESS COVER
MX123 CONN ASSY 49 CKT BLU OPT0 KEY C/32	2167440084	C-HSG-C0	G-CAP-0-P	TPA-C0	RS-2	LS-2	MAL-2	CPA-2	MSEAL	RSEAL	- - 46 - - 43 - - - - - - - 35 - 33 - 31 - 29 - - 26 25 - 23 - - - 20 19 - - 16 - - - - - - 10 - 8 - 6 - 4 - 2 -	SALEABLE	Replacing PN 345769453	345750005
MX123 CONN ASSY 49 CKT BLU OPT0 KEY C/30	2167440085	C-HSG-C0	G-CAP-0-P	TPA-C0	RS-2	LS-2	MAL-2	CPA-2	MSEAL	RSEAL	- - 46 - - 43 42 - - - - - - 35 - 33 - 31 - 29 - 27 26 25 - - 22 - - 20 19 - - 16 - - - - - - 10 - 8 - 6 - 4 - 2 -	SALEABLE		345750005
MX123 CONN ASSY 49 CKT BLK OPT0 KEY A/29	2167440086	C-HSG-A0	G-CAP-0-P	TPA-A0	RS-2	LS-2	MAL-2	CPA-2	MSEAL	RSEAL	- - - - - - 42 41 - 39 38 - - 35 - - - - 30 29 - - 26 - - - - 21 - - - 18 17 - 15 14 13 - 11 - - 8 7 6 - 4 3 - -	SALEABLE	Replacing PN 345769603	345750005
MX123 CONN ASSY 49 CKT BLK OPT0 KEY A/29	2167440087	C-HSG-A0	G-CAP-0-P	TPA-A0	RS-2	LS-2	MAL-2	CPA-2	MSEAL	RSEAL	- 47 - 45 44 - - - 40 - - 37 36 - - 33 - - 30 - - 27 26 - - - 22 - - - 18 17 - - 14 13 12 - - - 8 - - 5 4 3 - -	SALEABLE	Replacing PN 345769513	345750005
MX123 CONN ASSY 49 CKT BLU OPT0 KEY C/30	2167440088	C-HSG-C0	G-CAP-0-P	TPA-C0	RS-2	LS-2	MAL-2	CPA-2	MSEAL	RSEAL	- - 46 - - 43 42 - - - - - - 35 - 33 - 31 - 29 28 27 26 25 - - 22 - - 20 19 - - 16 - - - - - - 10 - 8 - - - 4 - 2 -	SALEABLE	Replacing PN 345769523	345750005
MX123 CONN ASSY 49 CKT BLK OPT0 KEY A/27	2167440089	C-HSG-A0	G-CAP-0-P	TPA-A0	RS-2	LS-2	MAL-2	CPA-2	MSEAL	RSEAL	- - - - 44 43 42 41 - 39 38 - - 35 - - - - 30 - 28 27 26 - - - - 21 - - 18 17 - - 14 13 - 11 - - 8 7 6 - 4 3 - -	SALEABLE	Replacing PN 345769493	345750005
MX123 CONN ASSY 49 CKT BLK OPT9 KEY A/30	2167440090	C-HSG-A9	G-CAP-9-P	TPA-A9	RS-2	LS-2	MAL-2	CPA-2	MSEAL	RSEAL	- - - - - - 42 41 - 39 38 - - 35 - 33 - - 30 - - - 26 - - - - 21 - - - 17 - 15 14 13 - 11 - - 8 7 6 - 4 3 - -	SALEABLE	Replacing PN 345769463	345750005
MX123 CONN ASSY 49 CKT BLU OPT0 KEY C/36	2167440091	C-HSG-C0	G-CAP-0-P	TPA-C0	RS-2	LS-2	MAL-2	CPA-2	MSEAL	RSEAL	- - - - - 43 42 - - - - - - - - - - 31 - 29 28 27 26 25 - - 22 - 20 19 - - - - - - - 11 - - - - - - - - 2 -	SALEABLE	Replacing PN 345769783	345750005
MX123 CONN ASSY 49 CKT BLU OPT0 KEY C/42	2167440092	C-HSG-C0	G-CAP-0-P	TPA-C0	RS-2	LS-2	MAL-2	CPA-2	MSEAL	RSEAL	- - - - - 43 42 - - - - - - - - - - - - - 28 27 26 25 - - - - 20 - - - - - - - - - - - - - - - - - - -	SALEABLE		345750005

molex

MX123 SEALED RCPT ASSY (49 CKT)
BOM & PIN OUT SHEET

ASSEMBLY DESCRIPTION	ASSEMBLY PART NUMBER	CONNECTOR HOUSING	GROMMET CAP	TPA	RIGHT SLIDE	LEFT SLIDE	MATE ASSIST LEVER	CPA	MAT SEAL	RING SEAL	BLOCKED TERMINALS CAVITY WITH A NUMBER INDICATES BLOCKED TERMINAL POSITION CAVITY WITHOUT A NUMBER INDICATES OPEN TERMINAL POSITION	STATUS	COMMENTS	INTEGRAL COMPONENTS SOLD SEPARATELY DRESS COVER
MX123 CONN ASSY 49 CKT BLK OPT0 KEY A/25	2167440093	C-HSG-A0	G-CAP-0-P	TPA-A0	RS-2	LS-2	MAL-2	CPA-2	MSEAL	RSEAL	48 - 46 - - 43 - - - 39 38 - 36 35 34 - - 31 - 29 - - - 25 24 23 - 21 - 20 19 - - - - - - - 11 10 9 - 7 6 5 - 3 - 1	SALEABLE		345750005
MX123 CONN ASSY 49 CKT BLU OPT0 KEY C/34	2167440094	C-HSG-C0	G-CAP-0-P	TPA-C0	RS-2	LS-2	MAL-2	CPA-2	MSEAL	RSEAL	- - - - - 43 42 - - - - - - - - - - 31 - 29 28 27 26 25 - - 22 - - 20 19 - - - 15 - - - 11 - - - - - - 5 - - 2 -	SALEABLE	Replacing PN 345769673	345750005
MX123 CONN ASSY 49 CKT BLK OPT0 KEY A/25	2167440095	C-HSG-A0	G-CAP-0-P	TPA-A0	RS-2	LS-2	MAL-2	CPA-2	MSEAL	RSEAL	- 47 - 45 44 - 42 41 40 - - 37 - - - 33 32 - 30 - 28 27 26 - - - 22 - - - - 18 17 16 15 14 13 12 - - - 8 - - - 4 - 2 -	SALEABLE	Replacing PN 345769683	345750005
MX123 CONN ASSY 49 CKT BLK OPT0 KEY A/24	2167440096	C-HSG-A0	G-CAP-0-P	TPA-A0	RS-2	LS-2	MAL-2	CPA-2	MSEAL	RSEAL	- 47 - 45 44 - 42 41 40 - - 37 - - - 33 32 - 30 - 28 27 26 - - - 22 - - - - 18 17 16 15 14 13 12 - - - 8 - - 5 4 - 2 -	SALEABLE		345750005
MX123 CONN ASSY 49 CKT BLK OPT0 KEY A/24	2167440097	C-HSG-A0	G-CAP-0-P	TPA-A0	RS-2	LS-2	MAL-2	CPA-2	MSEAL	RSEAL	- 47 - 45 44 - 42 41 40 - - 37 - - - 33 32 - 30 - 28 27 26 - - - 22 - - - - 18 17 16 15 14 13 12 - - - 8 - - - 4 3 2 -	SALEABLE		345750005
MX123 CONN ASSY 49 CKT BLK OPT9 KEY A/28	2167440098	C-HSG-A9	G-CAP-9-P	TPA-A9	RS-2	LS-2	MAL-2	CPA-2	MSEAL	RSEAL	- 47 - 45 44 - 42 - 40 - - - - - - 33 - - 30 - 28 - 26 - - - 22 - - - - 18 17 - 15 14 13 12 - - - 8 - - 5 4 3 2 -	SALEABLE		345750005
MX123 CONN ASSY 49 CKT BLU OPT9 KEY C/34	2167440100	C-HSG-C9	G-CAP-9-P	TPA-C9	RS-2	LS-2	MAL-2	CPA-2	MSEAL	RSEAL	- - 46 - - - 42 - - - - - - - - 33 - 31 - 29 28 27 26 25 - - 22 - 20 19 - - - - - - - - - - 8 - - - 4 - 2 -	SALEABLE		345750005